D. M. / / /
T & D. 110 / 19 / 93
S. R. M. / / /
S. A. M. 110 / 19 / 93

RJ Reynolds
Tobacco Company

G.H. MOULTON
Chain Accounts Manager

110 Lake Avenue South
Suite #41, Bldg. #2
Nesconset, NY 11767
516-724-1430
Fax 516-724-2677

October 4, 1993

CC: ALL SALES PERSONNEL

To:

M. A. Belniak	F. L. Maney
G. B. Brown	J. L. Merusi
J. H. Casey	J. A. Miller
G. R. Deschenes	L. M. O'Connor
T. J. Fitzin	R. J. O'Rourke
J. C. Gresty	G. M. Richardson
S. C. Grossberg	A. P. Scott
L. S. Justo	R. F. Segelke
D. W. Keeney	C. M. Uffindell
	D. T. Walsh

Subject: *7-Eleven - CVC Program*

Enclosed is the plan-o-gram which depicts the merchandising elements required for 7-Eleven's compliance, by each manufacturer, in the CVC program. Mr. Rich Flask of corporate 7-Eleven has agreed to send this plan-o-gram to all 7-Eleven divisions and other manufacturers asking their help to ensure compliance.

The plan-o-gram should be utilized to assist in maintaining compliance with franchisees. Any problems that cannot be corrected by your representatives should be directed toward the RJR Division that handles the local market office of 7-Eleven (as outlined in my letter of April 26, 1993, subject: 7-Eleven - Winston and Camel Summer Promotion). In addition, I am supplying Mr. Terry Lyons with non-compliance information and he is contacting Market Managers.

The plan-o-gram and involvement with all levels of 7-Eleven should improve compliance of the CVC program.

Should you have any questions, please contact me.

George H. Moulton

GHM/pk
att.

cc:

R. C. Farmer	P. E. Schmidt
R. F. Kane	M. A. Young
B. G. Norman	

51847 6537

a:\planogrm.cvc

"We work for smokers."

Source: https://www.industrydocuments.ucsf.edu/docs/mjhy0000

7-ELEVEN CIGARETTE MERCHANDISING ELEMENTS - FULL PARTICIPATION IN THE CVC PROGRAM

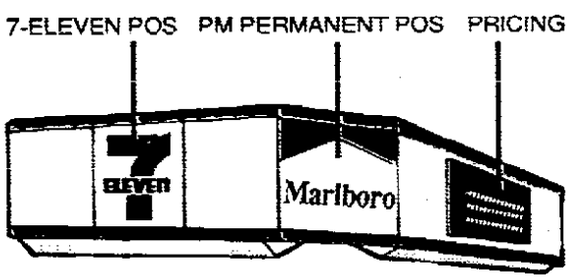

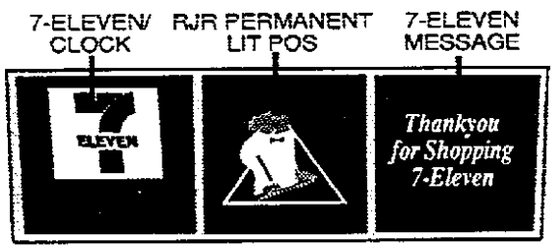

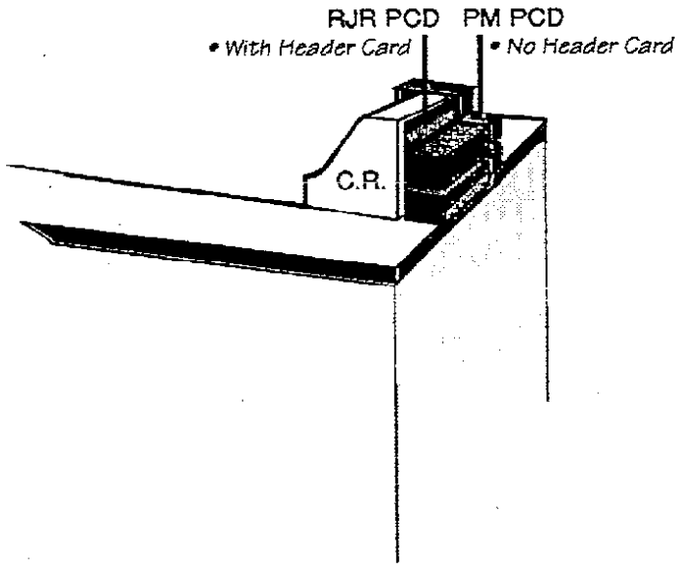

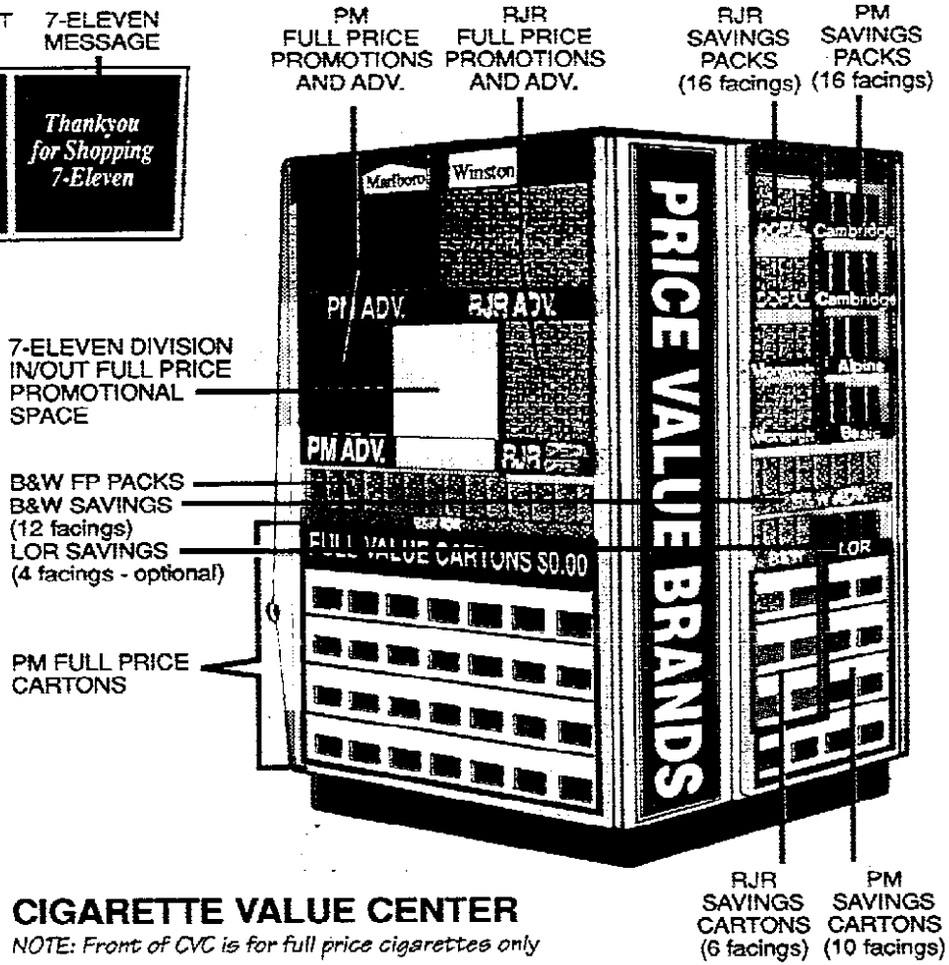

CIGARETTE VALUE CENTER

NOTE: Front of CVC is for full price cigarettes only

COUNTER AREA

- No counter displays, permanent or temporary are authorized except RJR PCD and Philip Morris PCD.
- No savings brands are authorized on the counter.
- No floor stand-alone displays are authorized.

51847 6538

ADVERTISING

- Manufacturer Adv. on CVC is authorized as indicated above.
- RJR is authorized permanent adv. in center section of the 7-Eleven clock as indicated.
- PM is authorized permanent adv. in one section of the Overhead Package Fixture as indicated.

CVC FRONT SIDE

- No savings brands are authorized
- Only full price product and advertising of contracted manufacturers (RJR, PM, and B&W) is authorized as shown above.
- All full price carton facings are contracted by PM.

CVC SAVINGS SIDE

- Packs - only saving brands and advertising of contracted manufacturers is allowed (RJR, PM, B&W and LOR).
- Cartons - only for RJR and PM savings brands as contracted.

9/93

Source: https://www.industrydocuments.ucsf.edu/docs/mjhy0000

7-ELEVEN CIGARETTE MERCHANDISING ELEMENTS - FULL PARTICIPATION IN THE CVC PROGRAM

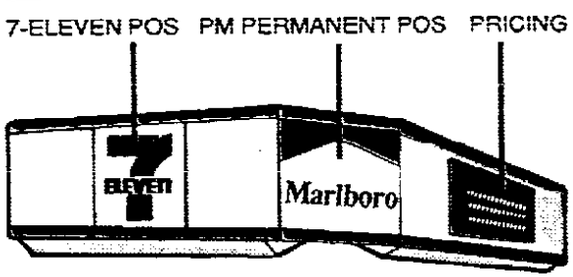

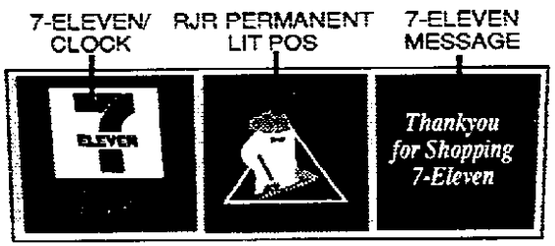

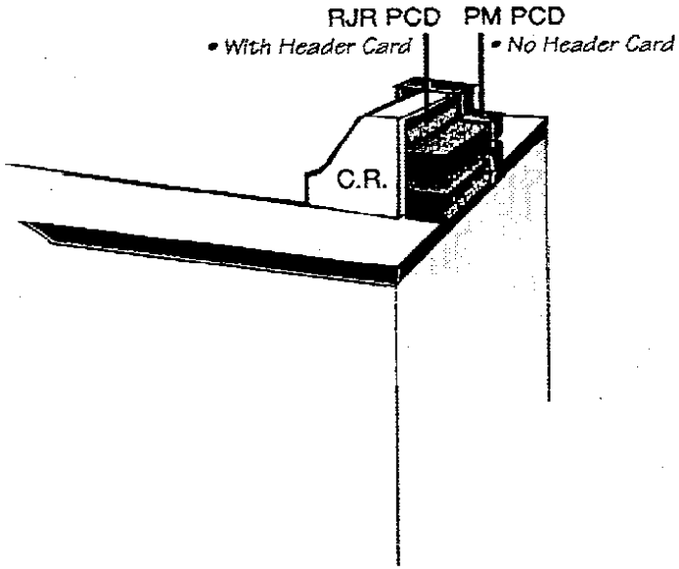

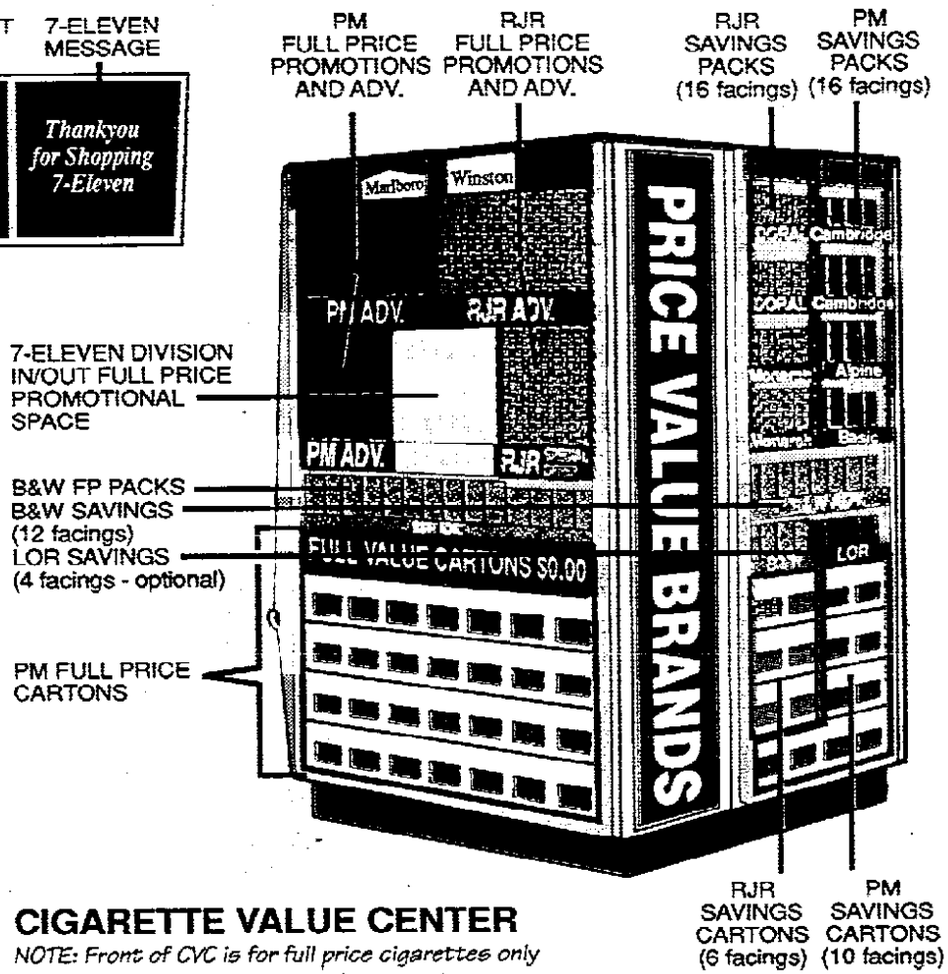

CIGARETTE VALUE CENTER

NOTE: Front of CVC is for full price cigarettes only

COUNTER AREA

- No counter displays, permanent or temporary are authorized except RJR PCD and Philip Morris PCD.
- No savings brands are authorized on the counter.
- No floor stand-alone displays are authorized.

ADVERTISING

- Manufacturer Adv. on CVC is authorized as indicated above.
- RJR is authorized permanent adv. in center section of the 7-Eleven clock as indicated.
- PM is authorized permanent adv. in one section of the Overhead Package Fixture as indicated.

CVC FRONT SIDE

- No savings brands are authorized
- Only full price product and advertising of contracted manufacturers (RJR, PM, and B&W) is authorized as shown above.
- All full price carton facings are contracted by PM.

CVC SAVINGS SIDE

- Packs - only saving brands and advertising of contracted manufacturers is allowed (RJR, PM, B&W and LOR).
- Cartons - only for RJR and PM savings brands as contracted.

9/93

51847 6539

Source: https://www.industrydocuments.ucsf.edu/docs/mjhy0000

7-ELEVEN CIGARETTE MERCHANDISING ELEMENTS - FULL PARTICIPATION IN THE CVC PROGRAM

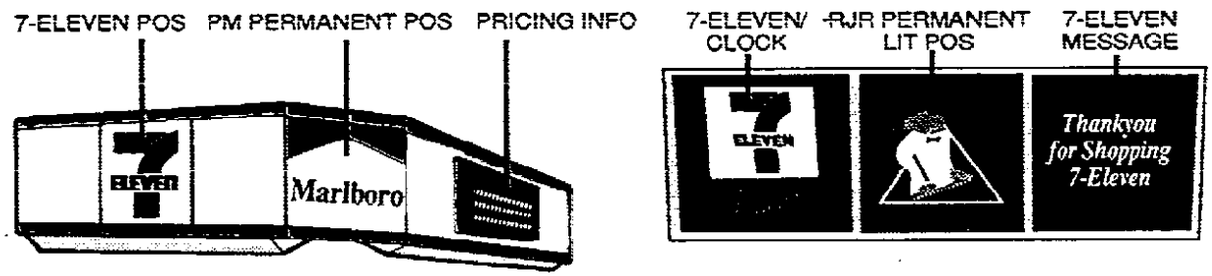

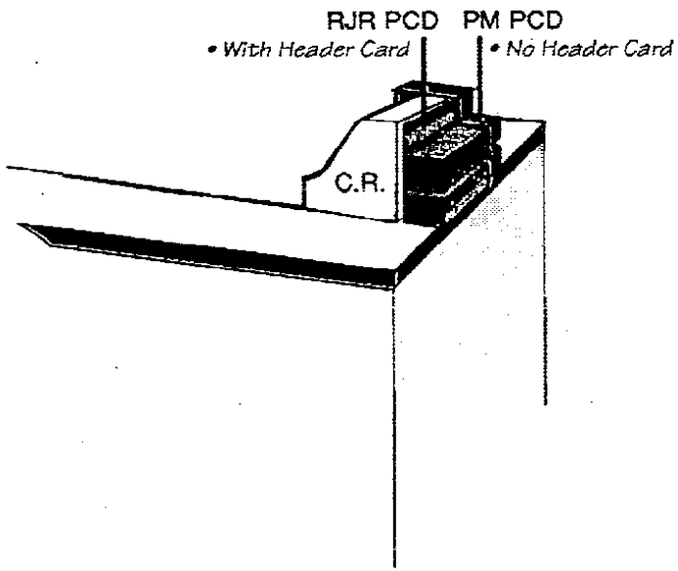

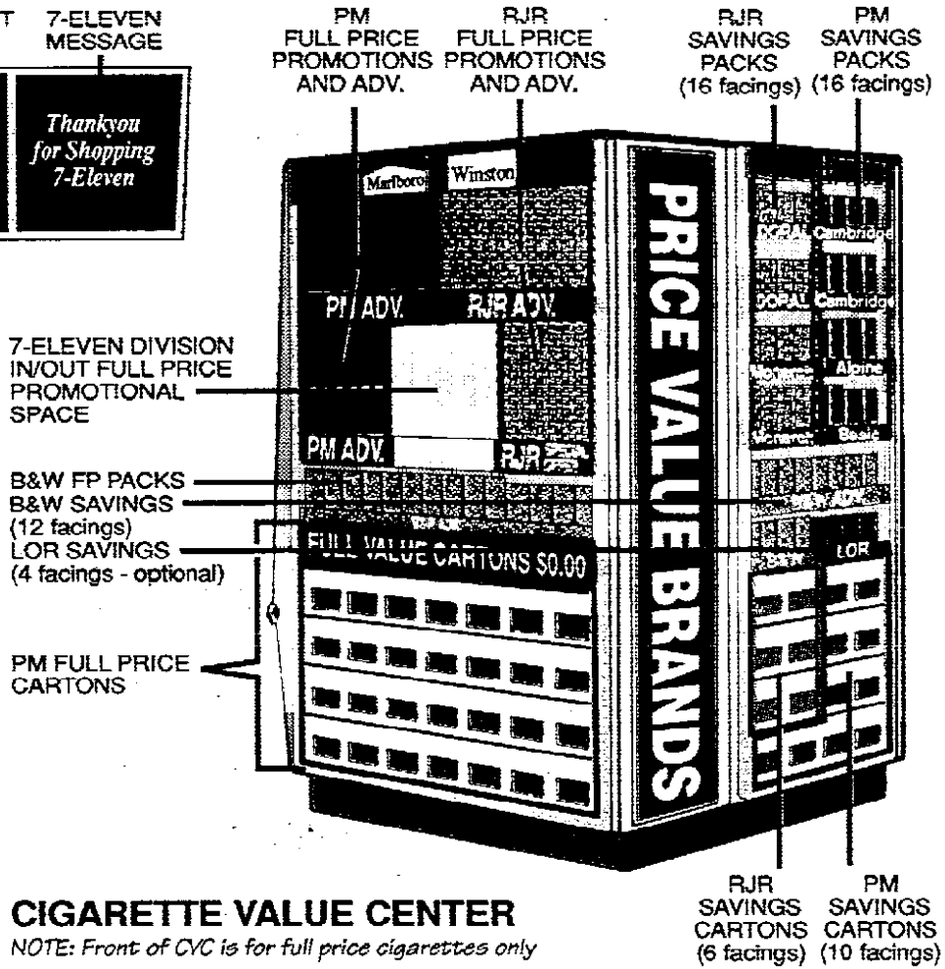

CIGARETTE VALUE CENTER

NOTE: Front of CVC is for full price cigarettes only

COUNTER AREA

- No counter displays, permanent or temporary are authorized except RJR PCD and Philip Morris PCD.
- No savings brands are authorized on the counter.
- No floor stand-alone displays are authorized.

51847 6540

ADVERTISING

- Manufacturer Adv. on CVC is authorized as indicated above.
- RJR is authorized permanent adv. in center section of the 7-Eleven clock as indicated.
- PM is authorized permanent adv. in one section of the Overhead Package Fixture as indicated.

CVC FRONT SIDE

- No savings brands are authorized
- Only full price product and advertising of contracted manufacturers (RJR, PM, and B&W) is authorized as shown above.
- All full price carton facings are contracted by PM.

CVC SAVINGS SIDE

- Packs - only saving brands and advertising of contracted manufacturers is allowed (RJR, PM, B&W and LOR).
- Cartons - only for RJR and PM savings brands as contracted.

9/93

Source: https://www.industrydocuments.ucsf.edu/docs/mjhy0000

7-ELEVEN CIGARETTE MERCHANDISING ELEMENTS - FULL PARTICIPATION IN THE CVC PROGRAM

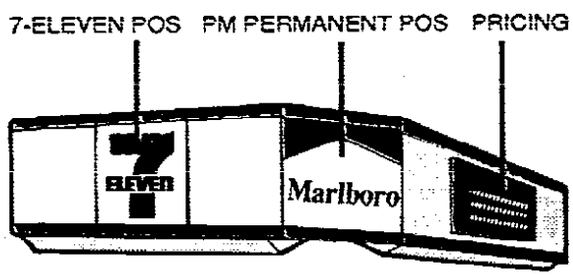

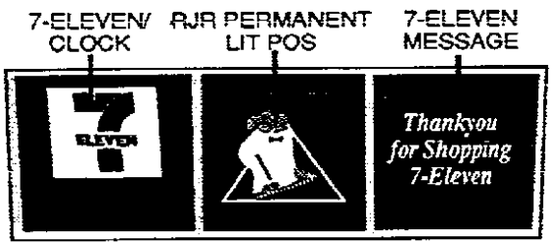

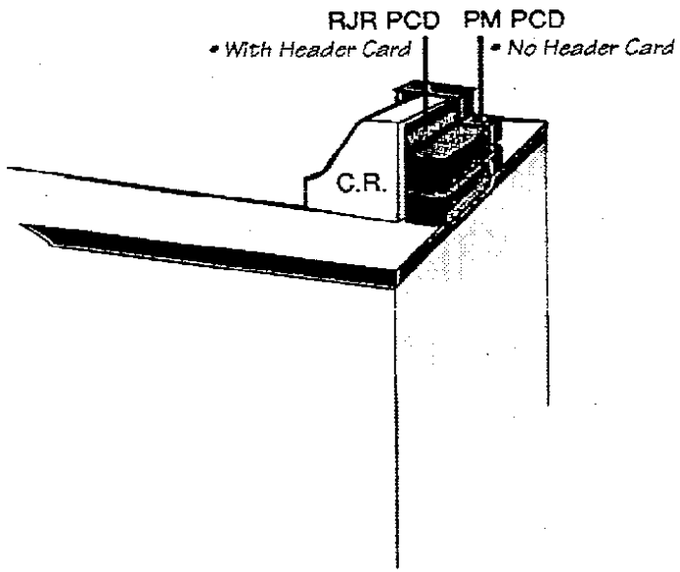

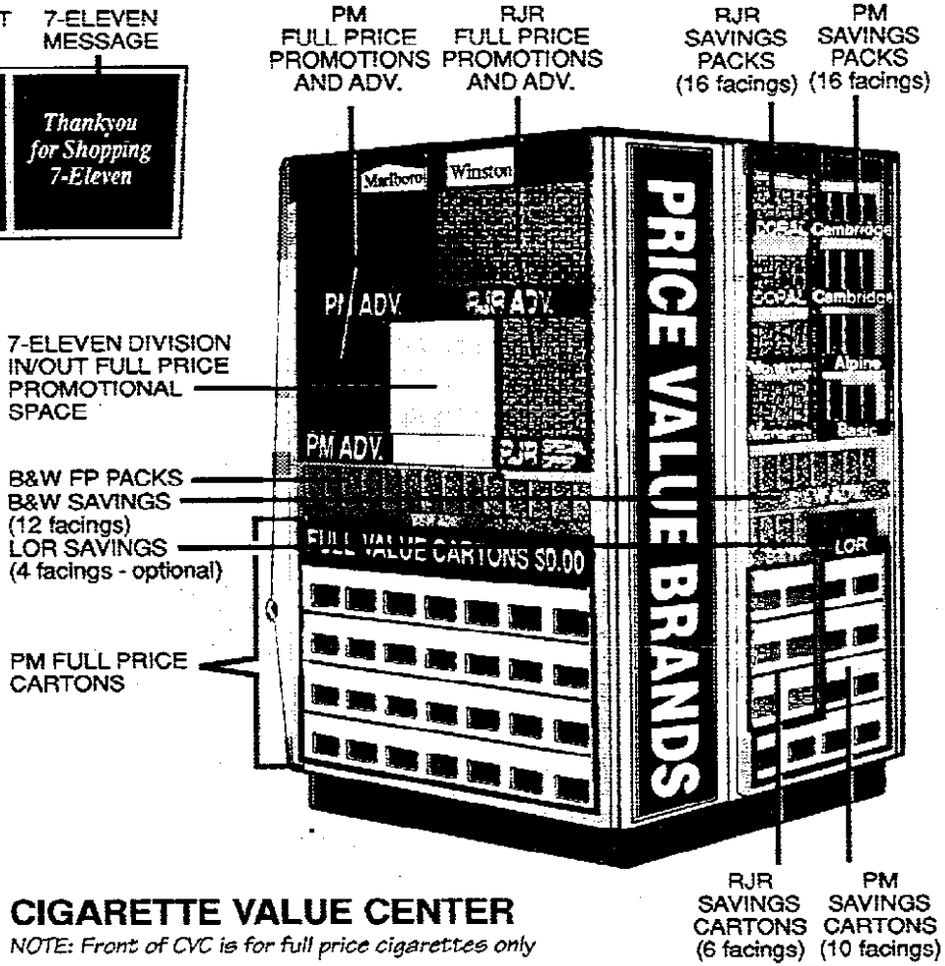

CIGARETTE VALUE CENTER

NOTE: Front of CVC is for full price cigarettes only

COUNTER AREA

- No counter displays, permanent or temporary are authorized except RJR PCD and Philip Morris PCD.
- No savings brands are authorized on the counter.
- No floor stand-alone displays are authorized.

ADVERTISING

- Manufacturer Adv. on CVC is authorized as indicated above.
- RJR is authorized permanent adv. in center section of the 7-Eleven clock as indicated.
- PM is authorized permanent adv. in one section of the Overhead Package Fixture as indicated.

CVC FRONT SIDE

- No savings brands are authorized
- Only full price product and advertising of contracted manufacturers (RJR, PM, and B&W) is authorized as shown above.
- All full price carton facings are contracted by PM.

CVC SAVINGS SIDE

- Packs - only saving brands and advertising of contracted manufacturers is allowed (RJR, PM, B&W and LOR).
- Cartons - only for RJR and PM savings brands as contracted.

9/93

51847 6541

Source: https://www.industrydocuments.ucsf.edu/docs/mjhy0000

7-ELEVEN CIGARETTE MERCHANDISING ELEMENTS - FULL PARTICIPATION IN THE CVC PROGRAM

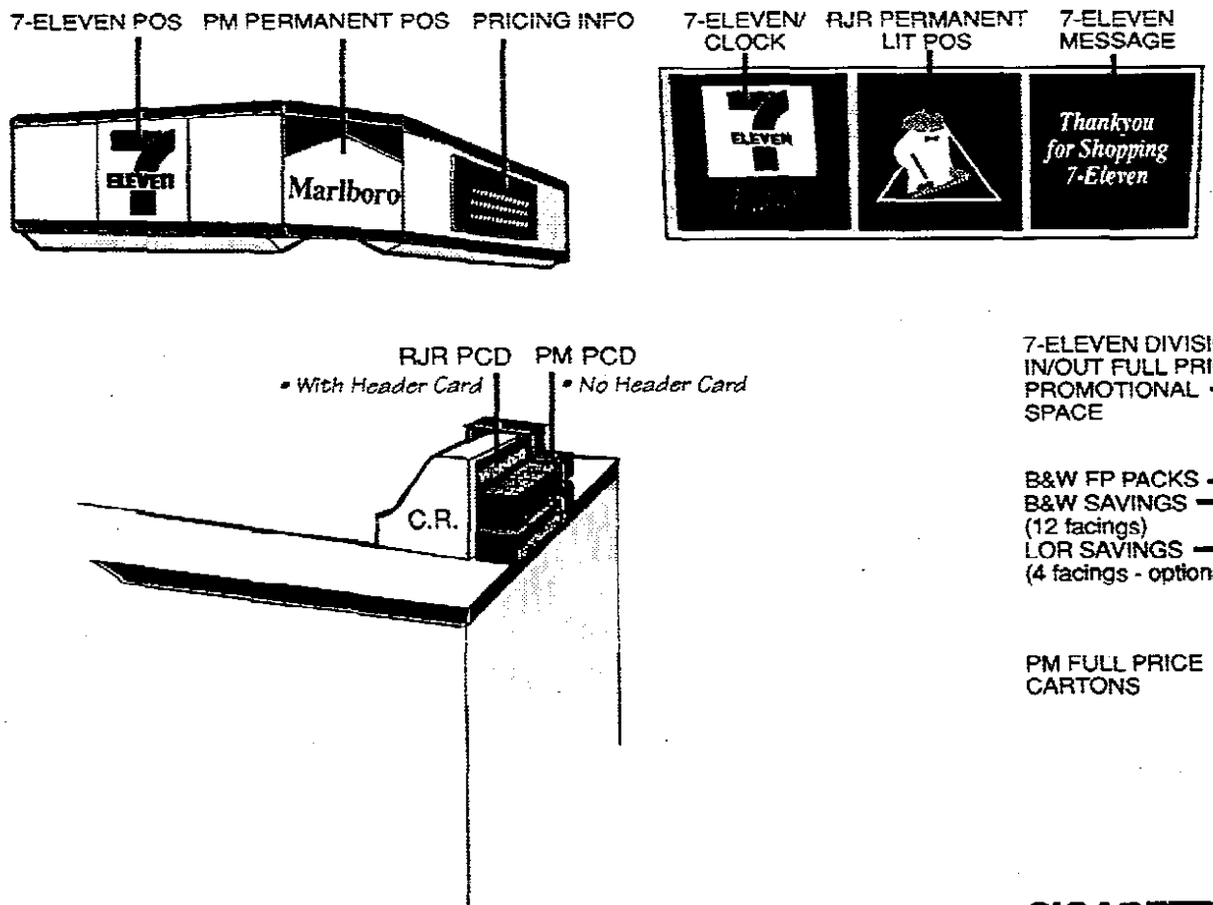

CIGARETTE VALUE CENTER

NOTE: Front of CVC is for full price cigarettes only

COUNTER AREA

- No counter displays, permanent or temporary are authorized except RJR PCD and Philip Morris PCD.
- No savings brands are authorized on the counter.
- No floor stand-alone displays are authorized.

51847 6542

ADVERTISING

- Manufacturer Adv. on CVC is authorized as indicated above.
- RJR is authorized permanent adv. in center section of the 7-Eleven clock as indicated.
- PM is authorized permanent adv. in one section of the Overhead Package Fixture as indicated.

CVC FRONT SIDE

- No savings brands are authorized
- Only full price product and advertising of contracted manufacturers (RJR, PM, and B&W) is authorized as shown above.
- All full price carton facings are contracted by PM.

CVC SAVINGS SIDE

- Packs - only saving brands and advertising of contracted manufacturers is allowed (RJR, PM, B&W and LOR).
- Cartons - only for RJR and PM savings brands as contracted.

9/93

Source: https://www.industrydocuments.ucsf.edu/docs/mjhy0000

7-ELEVEN CIGARETTE MERCHANDISING ELEMENTS - FULL PARTICIPATION IN THE CVC PROGRAM

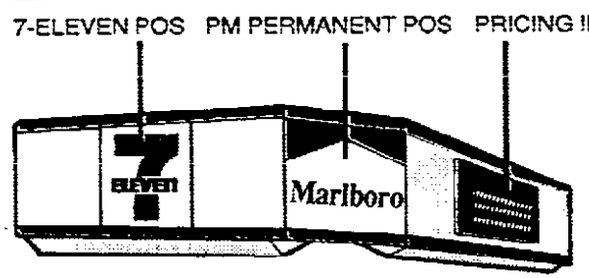

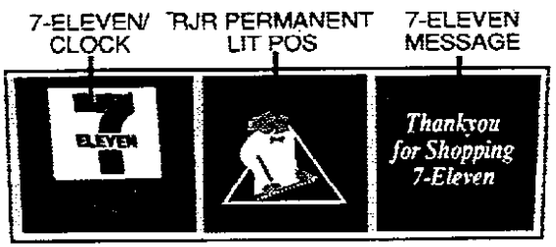

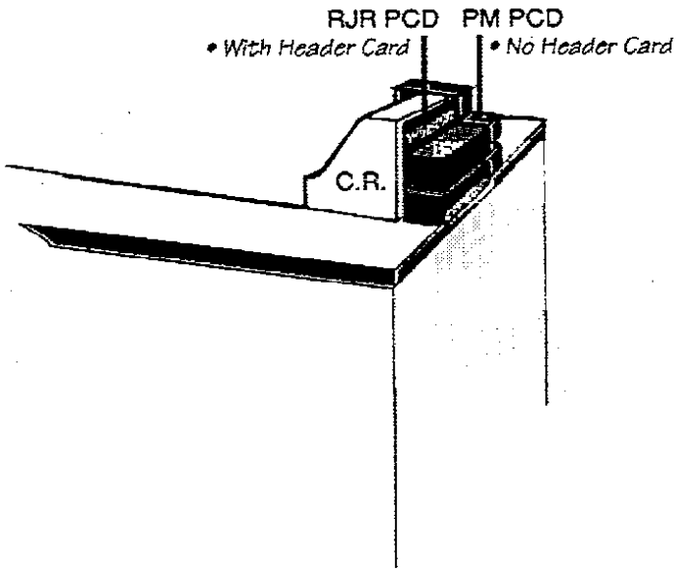

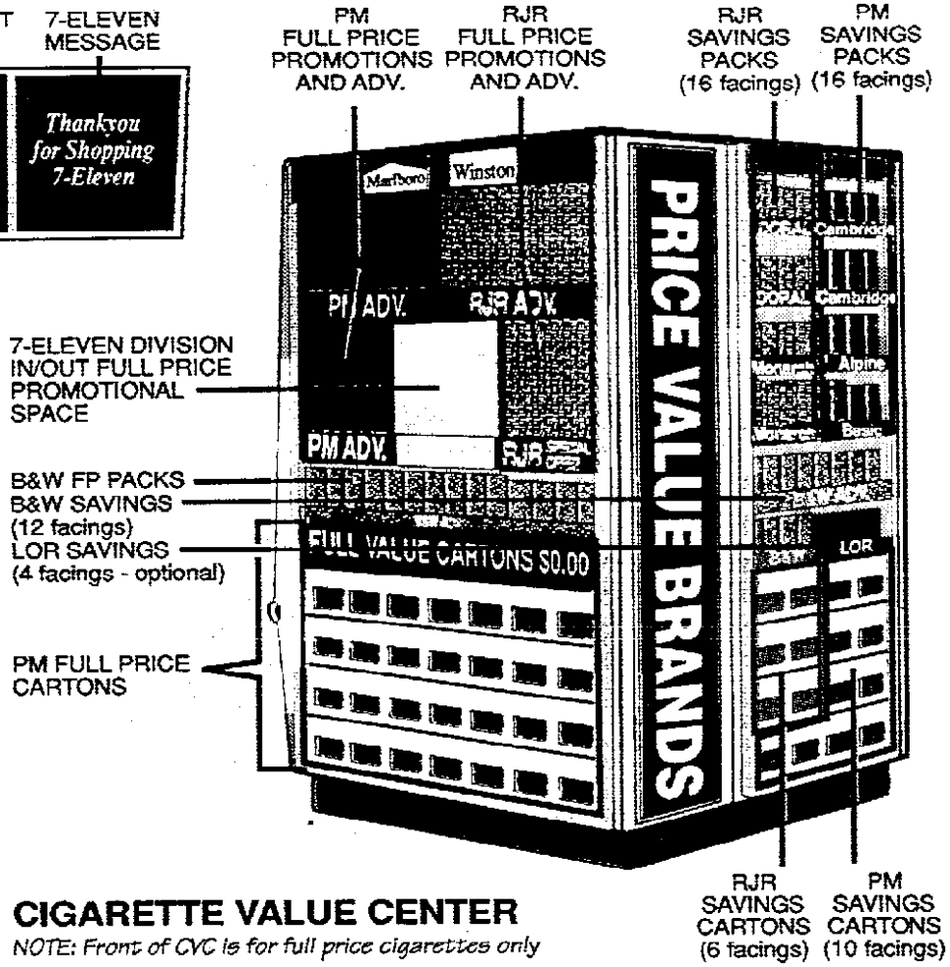

CIGARETTE VALUE CENTER

NOTE: Front of CVC is for full price cigarettes only

COUNTER AREA

- No counter displays, permanent or temporary are authorized except RJR PCD and Philip Morris PCD.
- No savings brands are authorized on the counter.
- No floor stand-alone displays are authorized.

ADVERTISING

- Manufacturer Adv. on CVC is authorized as indicated above.
- RJR is authorized permanent adv. in center section of the 7-Eleven clock as indicated.
- PM is authorized permanent adv. in one section of the Overhead Package Fixture as indicated.

CVC FRONT SIDE

- No savings brands are authorized
- Only full price product and advertising of contracted manufacturers (RJR, PM, and B&W) is authorized as shown above.
- All full price carton facings are contracted by PM.

CVC SAVINGS SIDE

- Packs - only saving brands and advertising of contracted manufacturers is allowed (RJR, PM, B&W and LOR).
- Cartons - only for RJR and PM savings brands as contracted.

9/93

51847 6543

Source: https://www.industrydocuments.ucsf.edu/docs/mjhy0000